TPS23753AEVM-235 Evaluation Module

This user's guide describes the TPS23753A evaluation module (EVM) (TPS23753AEVM-235). The TPS23753AEVM-235 contains evaluation and reference circuitry for the TPS23753A device. The TPS23753A device is an IEEE 802.3-2005 compliant, powered-device (PD) controller and power supply controller optimized for isolated converter topologies. TPS23753AEVM-235 is targeted at a high efficiency 10-W PD solution.

Contents

1 Introduction 2
1.1 Features 2
1.2 Applications 2
2 Electrical Specifications 2
3 Description 3
4 Schematic 4
5 General Configuration and Description 5
5.1 Physical Access 5
5.2 Test Setup 5
6 TPS23753AEVM-235 Performance Data 6
6.1 Startup 6
6.2 Transient Response 6
6.3 Efficiency 7
7 EVM Assembly Drawings and Layout Guidelines 8
7.1 PCB Drawings 8
7.2 Layout Guidelines 11
7.3 EMI Containment 12
8 Bill of Materials 13

List of Figures

1 TPS23753AEVM-235 Schematic 4
2 Typical TPS23753AEVM-235 Test Setup 5
3 Startup Response to Full Load (2 A) for a 48-V Input 6
4 Transient Response from 1 to 2 A for a 48-V Input 6
5 Efficiency of the TPS23753AEVM-235 7
6 Top-Side Component Placement 8
7 Top-Side Routing 8
8 Layer 2 Routing 9
9 Layer 3 Routing 9
10 Bottom-Side Routing 10
11 Bottom Component Placement 10

List of Tables

1 TPS23753AEVM-235 Electrical and Performance Specifications at 25°C 2
2 Connector Functionality 5
3 Test Points 5
4 TPS23753AEVM-235 BOM 13

Copyright © 2014, Texas Instruments Incorporated

1 Introduction

The TPS23753AEVM-235 allows reference circuitry evaluation of the TPS23753A device. It contains input and output power connectors and an array of onboard test points for circuit evaluation.

1.1 Features

- High-efficiency synchronous flyback converter
- Class 3, 5-V 2-A 10-W DC output

1.2 Applications

- Voice over internet protocol – IP telephones
- Wireless LAN – wireless access points
- Security – wired IP cameras

2 Electrical Specifications

Table 1. TPS23753AEVM-235 Electrical and Performance Specifications at 25°C

PARAMETER	TEST CONDITIONS	MIN	TYP	MAX	UNIT
POWER INTERFACE					
Input voltage	Applied to the power pins of connectors J2 or J4	0		57	V
Input UVLO, POE input J2	Rising input voltage			36	V
	Falling input voltage	30			
Detection voltage	At device terminals	3		10	V
Classification voltage	At device terminals	10		23	V
Classification current	R_{CLASS} = 90.9 Ω	26.5		29.3	mA
Inrush current-limit		100		180	mA
Operating current-limit		405		505	mA
DC-TO-DC CONVERTER					
Output voltage	V_{IN} = 48 V, $I_{LOAD} \le I_{LOAD}$ (max)	4.988		4.989	V
Output current	34 V ≤ V_{IN} ≤ 57 V			2	A
Output ripple voltage peak-to-peak	V_{IN} = 48 V, I_{LOAD} = 2 A		52.5		mV
Efficiency, end-to-end	V_{IN} = 48 V, I_{LOAD}= 500 mA		88.2		%
	V_{IN} = 48 V, I_{LOAD} = 1 A		92.7		
	V_{IN} = 48 V, I_{LOAD} = 2 A		93.7		
Switching frequency			250		kHz

Copyright © 2014, Texas Instruments Incorporated

3 Description

The TPS23753AEVM-235 enables full evaluation of the TPS23753A device. Refer to the schematic shown in Figure 1. Ethernet power is applied from J1 and is dropped to the bridge rectifier (D1, D2, D3, D4, Q1, Q2, R1, R2, R3, R4, R5, R6, R7, R8). The Power over Ethernet (PoE) transformer needed to transfer power or data is internal to J1. The internal RC circuits in J1 help balance the Ethernet cable impedance and are critical for ESD and EMO or EMC performance. The EMI or EMC filter and transient protection for the TPS23753A device are at the output of the diode bridge.

Input power can also be applied at J4 from a DC source when power at J1 is not present, or when the DC-to-DC converter is being evaluated and not the PoE frontend.

The TPS23753A (U2) PD and DC-to-DC converter circuitry is shown in Figure 1. R15 provides the detection signature and R25 provides the classification (class 3) signature. The switched side of the PD controller is to the right of U2. The TPS23753A RTN pin provides inrush limited turn on and charge of the bulk capacitor, C13.

The DC-to-DC converter is a high-efficiency synchronous flyback converter. The primary (Q4) switching MOSFET is driven from U2 GATE pin. The secondary (Q3) switching MOSFET is driven from a drive circuit (D9, D10, D11, R10) on T1.

Output voltage feedback is provided with U3 and associated error amplifier (U4) circuitry. R14 provides a means for error injection to measure the frequency response of the converter. This feedback circuit drives the U2 CTL pin, which provides a voltage proportional to the output load current. As the output load current decreases, the CTL pin voltage decreases.

Copyright © 2014, Texas Instruments Incorporated

4 Schematic

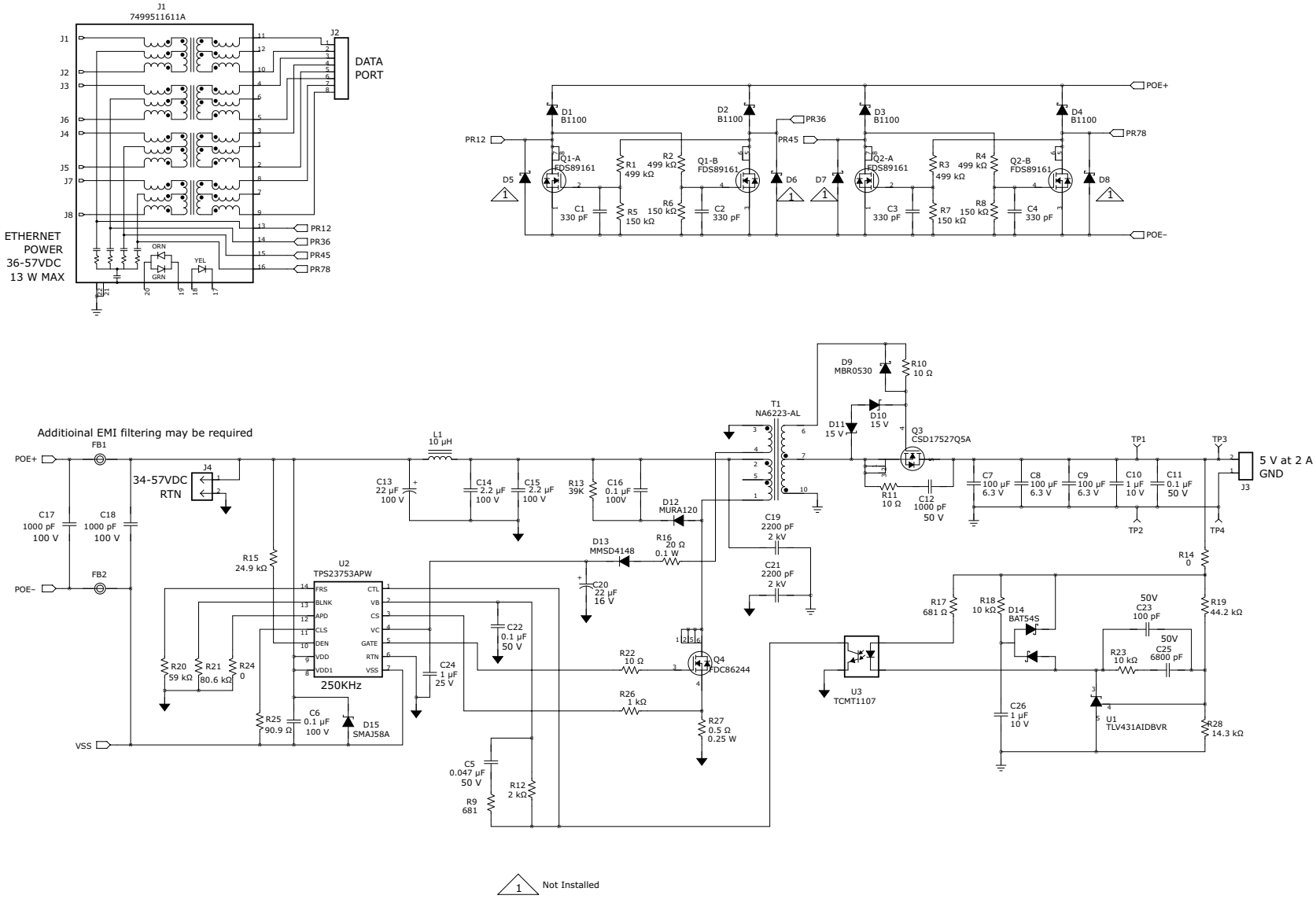

Figure 1. TPS23753AEVM-235 Schematic

Copyright © 2014, Texas Instruments Incorporated

5 General Configuration and Description

5.1 Physical Access

Table 2 lists the EVM connector functionality. Table 3 describes the test point availability and jumper functionality.

Table 2. Connector Functionality

Connector	Label	Description
J1	PWR+DATA	PoE input; connect to PSE power and data source
J2	DATA	Ethernet data passthrough; connect to downstream Ethernet device
J3	Output	Output connector to load
J4	DCDC Input	DC-to-DC converter input bypassing the PoE frontend; connect a 34-V to 57-V DC power supply, if there is no J1 connection to power the converter

Table 3. Test Points

Test Point	Color	Label	Description
TP3	RED	Output Load	Voltage taken directly at the load
TP1	RED	Output Load	Voltage taken directly at the output capacitors

5.2 Test Setup

Figure 2 shows the typical test setup for the EVM.

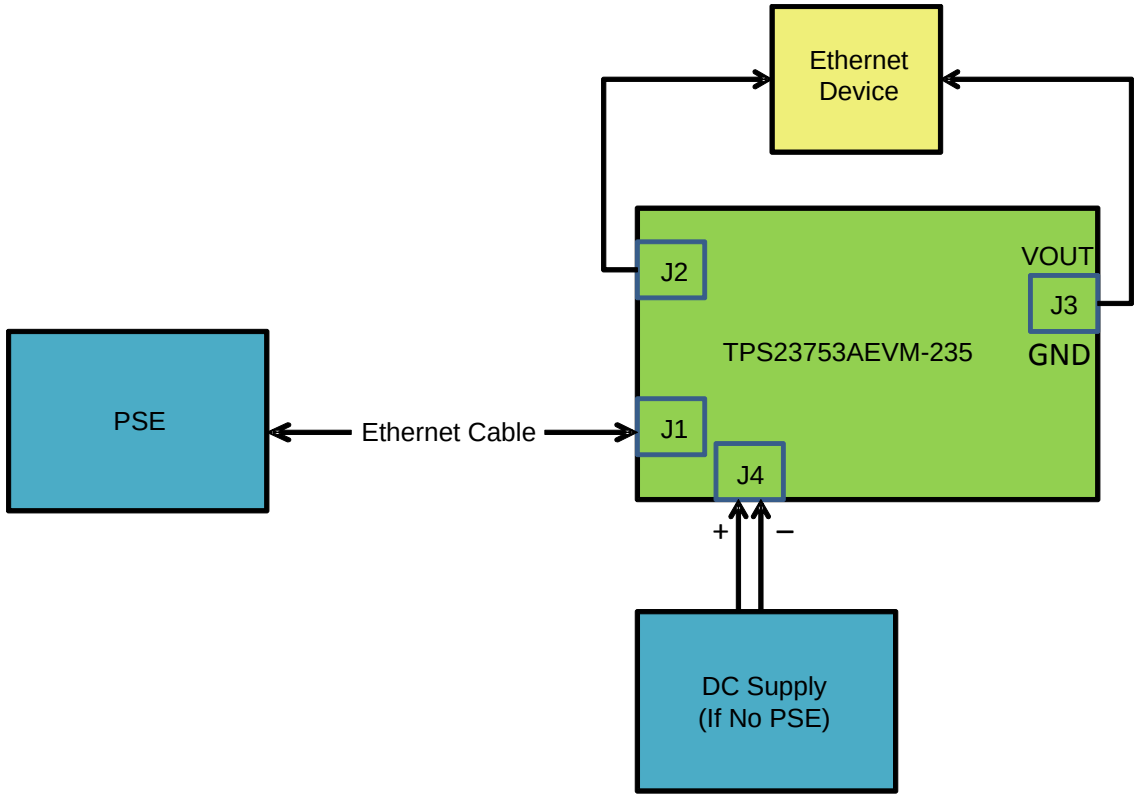

Figure 2. Typical TPS23753AEVM-235 Test Setup

Copyright © 2014, Texas Instruments Incorporated

6 TPS23753AEVM-235 Performance Data

6.1 Startup

Figure 3 shows the startup response of the TPS23753AEVM-235.



Figure 3. Startup Response to Full Load (2 A) for a 48-V Input

6.2 Transient Response

Figure 4 shows the transient response of the TPS23753AEVM-235.

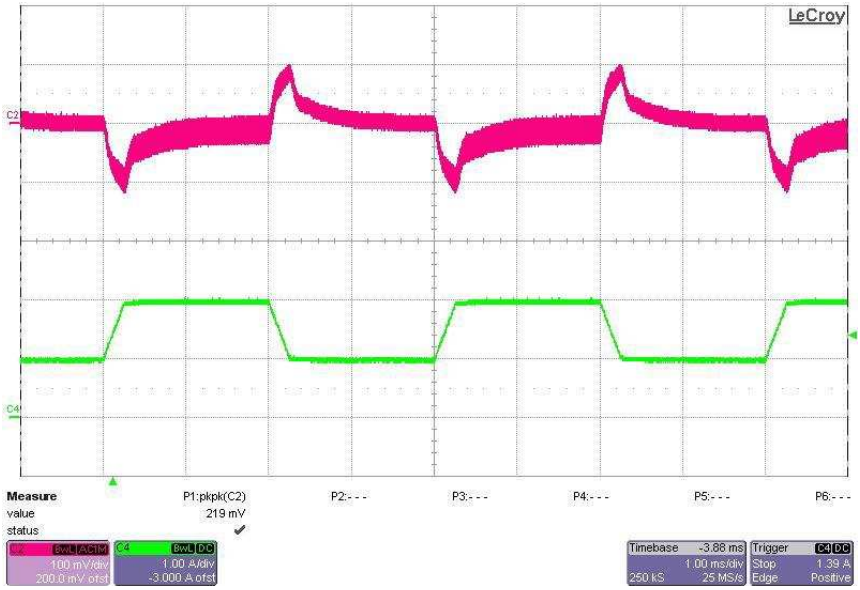

Figure 4. Transient Response from 1 to 2 A for a 48-V Input

Copyright © 2014, Texas Instruments Incorporated

6.3 Efficiency

Figure 5 shows the efficiency of the TPS23753AEVM-235.

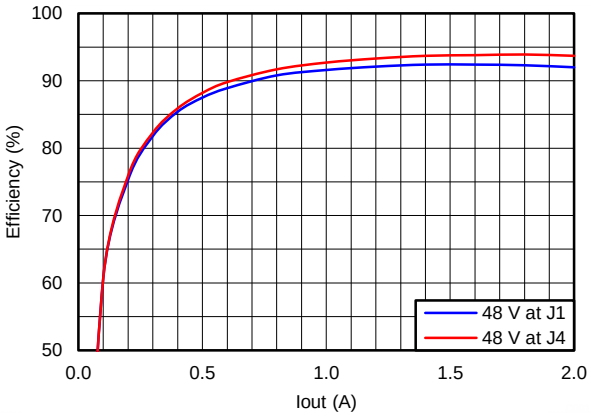

Figure 5. Efficiency of the TPS23753AEVM-235

Copyright © 2014, Texas Instruments Incorporated

7 EVM Assembly Drawings and Layout Guidelines

7.1 PCB Drawings

Figure 6 to Figure 11 show the component placement and layout of the TPS23753AEVM-235.

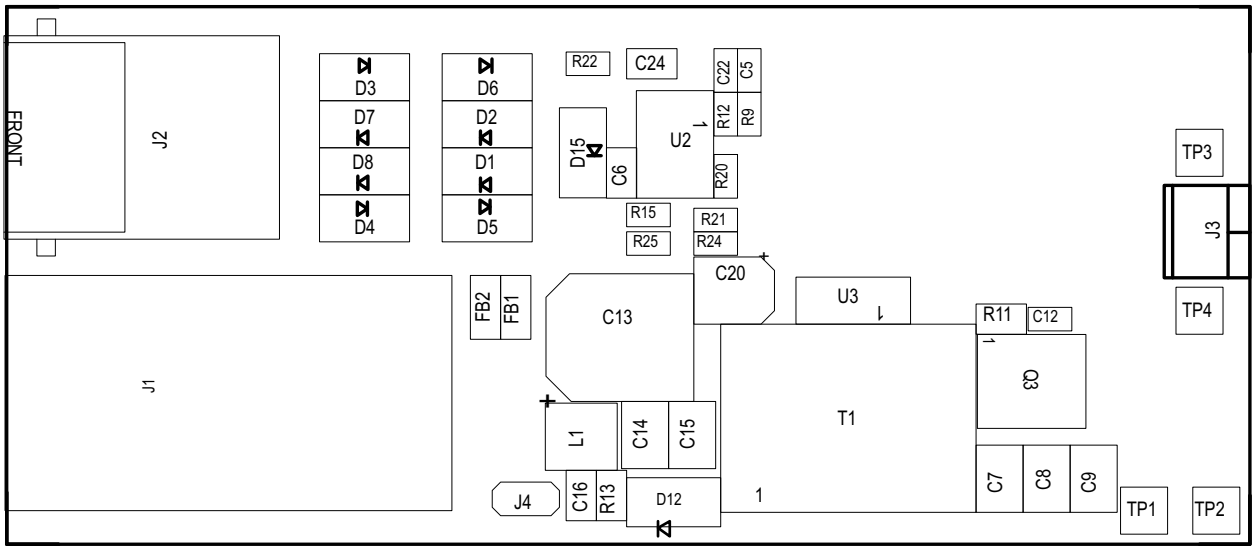

Figure 6. Top-Side Component Placement

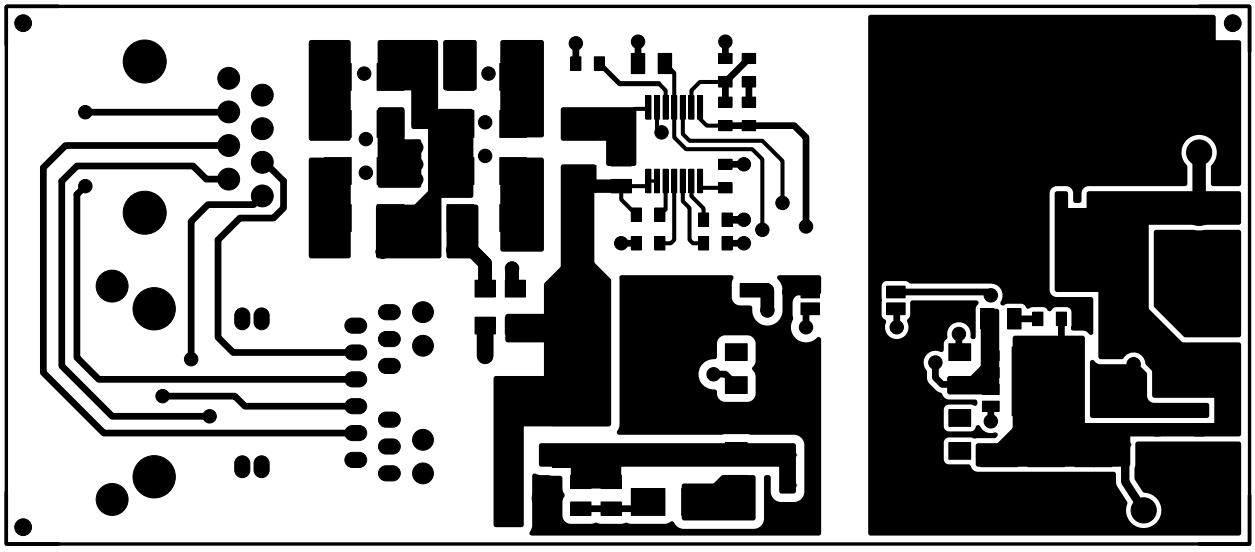

Figure 7. Top-Side Routing

Copyright © 2014, Texas Instruments Incorporated

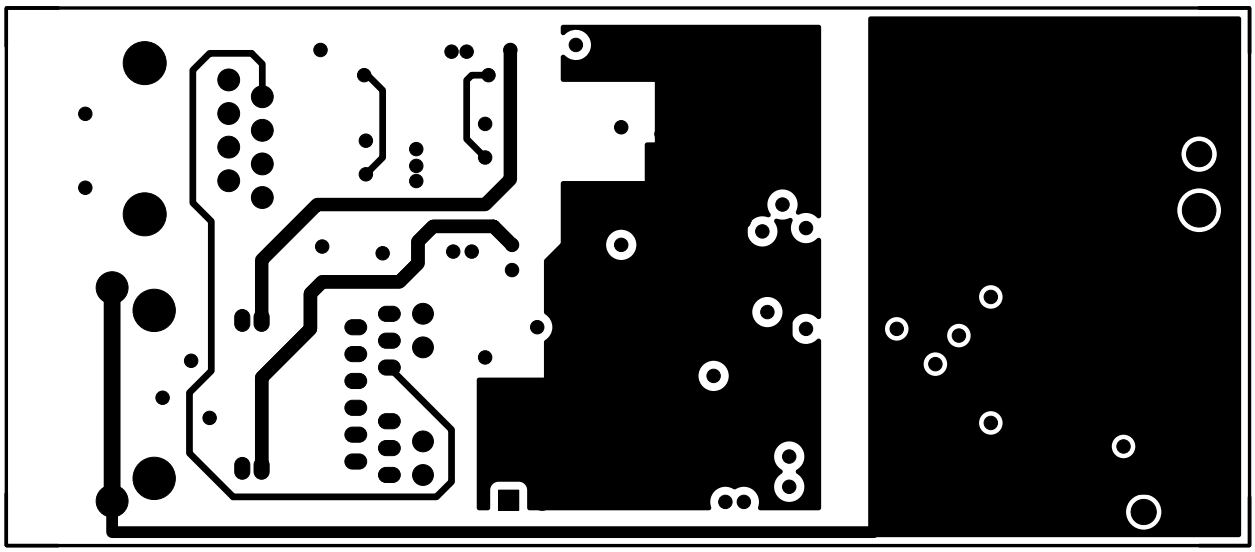

Figure 8. Layer 2 Routing

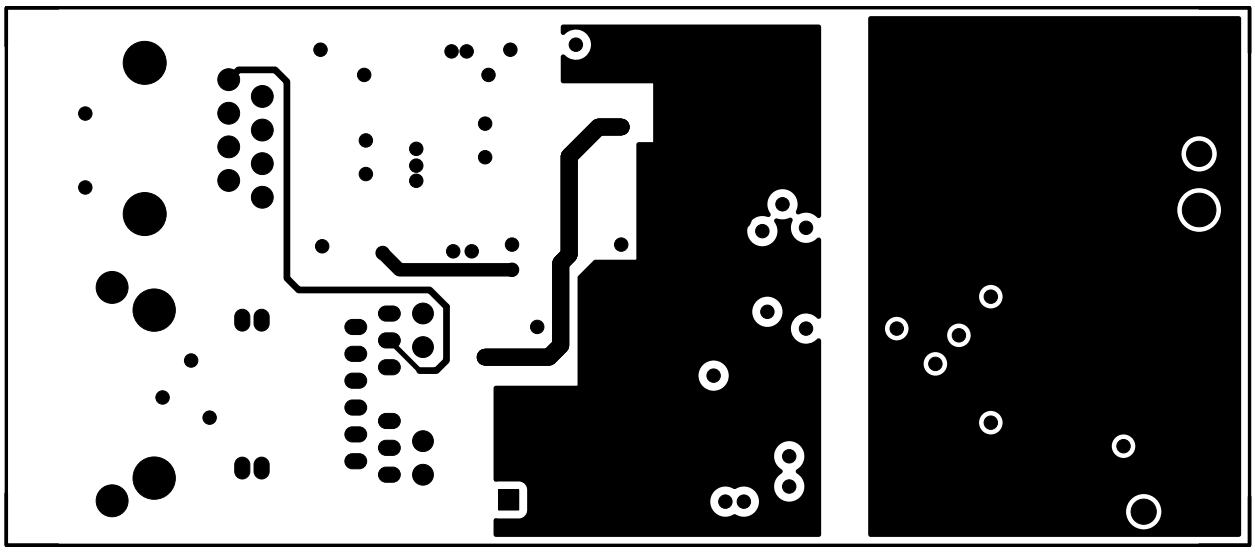

Figure 9. Layer 3 Routing

Copyright © 2014, Texas Instruments Incorporated

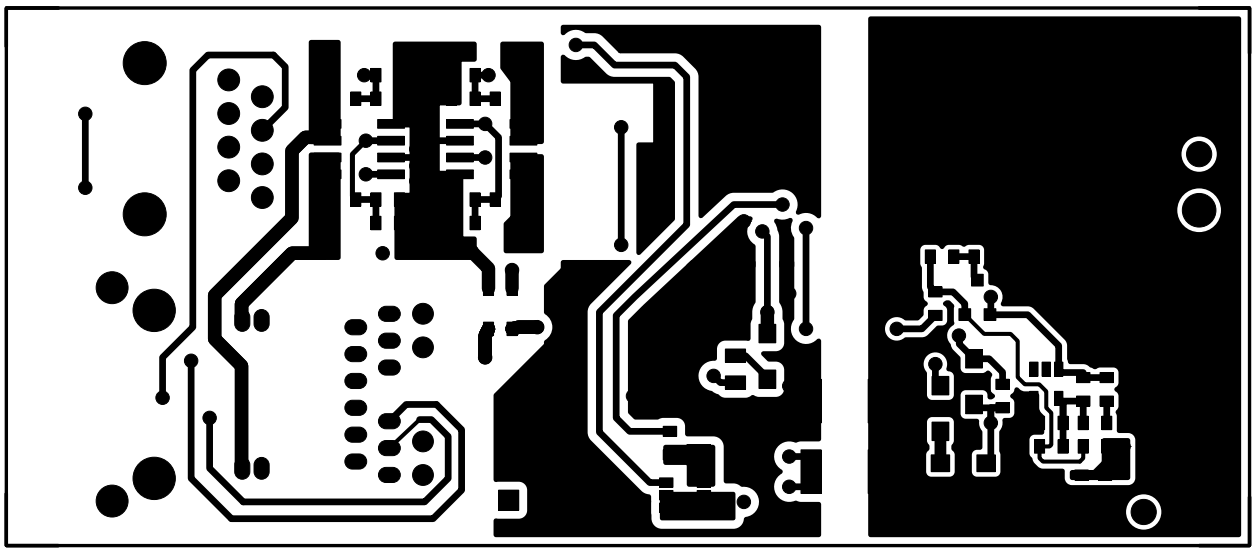

Figure 10. Bottom-Side Routing

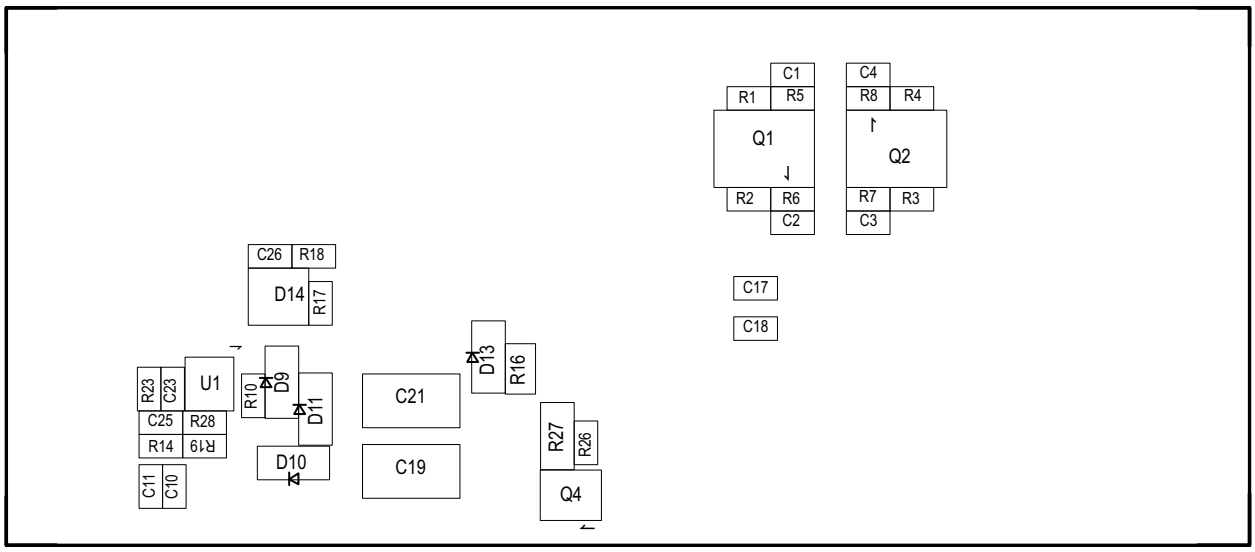

Figure 11. Bottom Component Placement

Copyright © 2014, Texas Instruments Incorporated

7.2 Layout Guidelines

The layout of the PoE frontend should follow power and EMI or ESD best-practice guidelines. A basic set of recommendations includes:

- Parts placement must be driven by power flow in a point-to-point manner; RJ-45, Ethernet transformer, diode bridges, TVS and 0.1-µF capacitor, and TPS23753A converter input bulk capacitor.
- Make all leads as short as possible with wide power traces and paired signal and return.
- No crossovers of signals from one part of the flow to another are allowed.
- Spacing consistent with safety standards like IEC60950 must be observed between the 48-V input voltage rails and between the input and an isolated converter output.
- Place the TPS23753A over split, local ground planes referenced to VSS for the PoE input and to COM/RTN for the converter. Whereas the PoE side may operate without a ground plane, the converter side must have one. Do not place logic ground and power layers under the Ethernet input or the converter primary side.
- Use large copper fills and traces on SMT power-dissipating devices, and use wide traces or overlay copper fills in the power path.

The DC-to-DC converter layout benefits from basic rules such as:

- Pair signals to reduce emissions and noise, especially the paths that carry high-current pulses, which include the power semiconductors and magnetics
- Minimize the trace length of high current power semiconductors and magnetic components
- Where possible, use vertical pairing
- Use the ground plane for the switching currents carefully
- Keep the high-current and high-voltage switching away from low-level sensing circuits including those outside the power supply
- Proper spacing around the high-voltage sections of the converter

Copyright © 2014, Texas Instruments Incorporated

7.3 EMI Containment

- Use compact loops for dv/dt and di/dt circuit paths (power loops and gate drives)
- Use minimal, yet thermally adequate, copper areas for heat sinking of components tied to switching nodes (minimize exposed radiating surface). Hide copper associated with switching nodes under shielded magnetics, where possible.
- Use copper ground planes (possible stitching) and top-layer copper floods (surround circuitry with ground floods)
- Use a 4-layer PCB, if economically feasible (for better grounding)
- Minimize the amount of copper area associated with input traces (to minimize radiated pickup)
- Heat sink the quiet side of components instead of the switching side, where possible (like the output side of inductor)
- Use Bob Smith terminations, Bob Smith EFT capacitor, and Bob Smith plane. Use Bob Smith plane as a ground shield on input side of PCB (creating a phantom or literal earth ground)
- Use LC filter at DC-to-DC input
- Dampen high-frequency ringing on all switching nodes, if present (allow for possible snubbers)
- Control rise times with gate-drive resistors and possibly snubbers
- Switching frequency considerations
- Use of EMI bridge capacitor across isolation boundary (isolated topologies)
- Observe the polarity dot on inductors (embed noisy end)
- Use of ferrite beads on input (allow for possible use of beads or 0-Ω resistors)
- Maintain physical separation between input-related circuitry and power circuitry (use ferrite beads as boundary line)
- Balance efficiency versus acceptable noise margin
- Possible use of common-mode inductors
- Possible use of integrated RJ-45 jacks (shielded with internal transformer and Bob Smith terminations)
- End-product enclosure considerations (shielding)

Copyright © 2014, Texas Instruments Incorporated

8 Bill of Materials

Table 4. TPS23753AEVM-235 BOM(1)(2)(3)

COUNT	REFDES	VALUE	DESCRIPTION	SIZE	PART NUMBER	MFR	Alternative Part Number	Alternative MFR
2	FB1, FB2		Bead, Ferrite, SMT, 600 Ohms, 2A	805	MPZ2012S601A	TDK	742792040	Wurth Electronics
1	C5	0.047uF	Capacitor, Ceramic, 50V, X7R, 10%	603	C1608X7R1H473K080AA	TDK		
2	C11, C22	0.1uF	Capacitor, Ceramic, 50V, X7R, 10%	603	06035C104KAT2A	AVX		
1	C12	1000pF	Capacitor, Ceramic, 50V, C0G, 10%	603	C1608C0G1H102J080AA	TDK		
2	C17, C18	1000pF	Capacitor, Ceramic, 100V, X7R, 10%	603	C1608X7R2A102K080AA	TDK		
1	C23	100pF	Capacitor, Ceramic, 50V, C0G, 10%	603	C1608C0G1H101J080AA	TDK		
2	C10, C26	1uF	Capacitor, Ceramic, 10V, X5R, 20%	603	C0603C105K8PACTU	Kemet		
1	C1, C2,C3, C4	330pF	Capacitor, Ceramic, 50V, C0G, 10%	603	06035A331JAT2A	Farnell		
1	C25	6800pF	Capacitor, Ceramic, 50V, X7R, 10%	603	C0603C682K5RACTU	Kemet		
2	C6, C16	0.1uF	Capacitor, Ceramic, 100V, X7R, 10%	805	GRM188R72A104KA35D	Murata		
1	C24	1uF	Capacitor, Ceramic, 25V, X7R, 10%	805	C1608X5R1E105K080AC	TDK		
3	C7, C8, C9	100uF	Capacitor, Ceramic, 6.3V, 20%	1210	C3225X5R0J107M	TDK		
2	C14, C15	2.2uF	Capacitor, Ceramic, 100V, X7R, 10%	1210	HMK325B7225KN-T	Taiyo Yuden		
2	C19, 21	2200pF	Capacitor, Ceramic, 2KV, X7R, 20%	1812	C4532X7R3D222K130KA	TDK		
1	C13	22uF	Capacitor, Aluminum, 100V, 20%	8x10.2mm	EEEFK2A220P	Panasonic		
1	C20	22uF	Capacitor, Aluminum, 16V, ±20%	4x5.8mm	EEEFK1C220UR	Panasonic		
1	J1	7499511611A	Connector, RJ45, PoE+ Enabled, 10/100/1000 BaseT	0.670 x 1.300 inch	7499511611A	WE		
1	J2	55520252-4	Connector, Jack, Modular, 8 POS	0.705 x 0.820	5520252-4	AMP		
1	D14	BAT54S	Diode, Dual Schottky, 200-mA, 30-V	SOT23	BAT54S	Zetex		
1	D13	MMSD4148	Diode, Switching, 100V, 200mA, 400mW,	SOD-123	MMSD4148G	On Semi		
2	D10, D11	15V	Diode, Zener, 15V, 500mW	SOD123	MMSZ5245BT3G	On Semi		
1	D12	MURA120	Rectifier, Ultrafast Power, 200V 1A	SMA	MURA120T3G	On Semi		
1	D9	MBR0530	Diode, Schottky, 0.5A, 30V	SOD-123	MBR0530G	On Semi		
4	D1, D2, D3, D4	B1100	Diode, Schottky, 1A, 100V	SMA	B1100-13-F	Diodes, Inc		
0	D5, D6, D7, D8	DNP	Diode, Schottky, 1A, 100V	SMA	B1100-13-F	Diodes, Inc		
1	D15	SMAJ58A	Diode, TVS, 58-V, 1W	SMA	SMAJ58A-13-F	Diodes Inc.		
1	J4	PEC02SAAN	Header, Male 2-pin, 100mil spacing,	0.100 inch x 2	PEC02SAAN	Sullins		
1	L1	10uH	Inductor, SMT, 1.25A, 200milliohm	4x4mm	LPS4018-103ML	Coilcraft	74437324100	Wurth Electronics
1	U3	TCMT1107	IC, Photocoupler, 3750VRMS, 80-160% CTR	MF4	TCMT1107	Vishay		
2	R14, R24	0	Resistor, Chip, 1/16W, 1%	603	ERJ-3GEY0R00V	Panasonic		

(1) These assemblies are ESD sensitive, ESD precautions shall be observed.
(2) These assemblies must be clean and free from flux and all contaminants. Use of no clean flux is not acceptable.
(3) These assemblies must comply with workmanship standards IPC-A-610 Class 2.

Copyright © 2014, Texas Instruments Incorporated

Table 4. TPS23753AEVM-235 BOM[(1)(2)(3)] (continued)

COUNT	REFDES	VALUE	DESCRIPTION	SIZE	PART NUMBER	MFR	Alternative Part Number	Alternative MFR
2	R10, R22	10	Resistor, Chip, 1/16W, 5%	603	CRCW060310R0JNEA	Vishay		
2	R18, R23	10K	Resistor, Chip, 1/16W, 1%	603	CRCW060310k0FKEA	Vishay		
1	R28	14.3K	Resistor, Chip, 1/16W,1%	603	CRCW060314K3FKEA	Vishay		
4	R5, R6, R7, R8	150K	Resistor, Chip, 1/16W, 1%	603	CRCW0603150KFKEA	Vishay		
1	R26	1K	Resistor, Chip, 1/16W, 1%	603	CRCW06031K00FKEA	Vishay		
1	R15	24.9K	Resistor, Chip, 1/16W, 1%	603	CRCW060324K9FKEA	Vishay		
1	R12	2K	Resistor, Chip, 1/16W, 1%	603	CRCW06032K00FKEA	Vishay		
1	R19	44.2K	Resistor, Chip, 1/16W, 1%	603	CRCW060344K2FKEA	Vishay		
4	R1, R2, R3, R4	499K	Resistor, Chip, 1/16W, 1%	603	CRCW0603499KFKEA	Vishay		
1	R20	59K	Resistor, Chip, 1/16W,1%	603	CRCW060359K0FKEA	Vishay		
2	R9, R17	681	Resistor, Chip, 1/16W, 1%	603	CRCW0603681RFKEA	Vishay		
1	R21	80.6K	Resistor, Chip, 1/16W,1%	603	CRCW060380K6FKEA	Vishay		
1	R25	90.9	Resistor, Chip, 1/16W,1%	603	CRCW060390R9FKEA	Vishay		
1	R11	10	Resistor, Chip, 1/10W, 5%	805	CRCW080510R0JNEA	Vishay		
1	R16	20	Resistor, Chip, 1/10W, 5%	805	CRCW080520R0JNEA	Vishay		
1	R13	39K	Resistor, Chip, 1/10W, 5%	805	CRCW080539K0JNEA	Vishay		
1	R27	0.5	Resistor, Chip, 1/4W, 1%	1206	CSR1206FKR500	Stackpole		
1	J3	ED555/2DS	Terminal Block, 2-pin, 6-A, 3.5mm	0.27 x 0.25 inch	ED555/2DS	OST		
1	U1	TLV431AIDBVR	IC, Precision Adjustable Shunt Regulator	SOT23-5	TLV431AIDBVR	TI		
2	TP1, TP3	5000	Test Point, Red, Thru Hole Color Keyed	0.100 x 0.100 inch	5000	Keystone		
2	TP2, TP4	5001	Test Point, Black, Thru Hole Color Keyed	0.100 x 0.100 inch	5001	Keystone		
1	U2	TPS23753APW	IC, IEEE 802.3af Integrated Primary Side Controller	TSSOP14	TPS23753APW	TI		
1	Q3	CSD17527Q5A	MOSFET, N-Chan, 30V, 65A, 11.8milli-ohm	SON5x6	CSD17527Q5A	TI		
1	Q4	FDC86244	Trans, Nch, 150V, 2.3A, 144 milliohm	SuperSOT-6	FDC86244	Fairchild		
2	Q1, Q2	FDS89161	MOSFET, Dual NChan 100V, 2.7A , 105 milliOhm	SO8	FDS89161	Fairchild		
1	T1	NA6223-AL	Transformer, Flyback	12.7x17.75 mm	NA6223-AL	Coilcraft	750314433	Wurth Electronics
1	--		PCB, 3.7 In x 1.6 In x 0.062 In		PWR235	Any		

Copyright © 2014, Texas Instruments Incorporated

Revision History

Changes from Original (January 2014) to A Revision	Page
• Changed the Bill of Materials	13

NOTE: Page numbers for previous revisions may differ from page numbers in the current version.

Copyright © 2014, Texas Instruments Incorporated

ADDITIONAL TERMS AND CONDITIONS, WARNINGS, RESTRICTIONS, AND DISCLAIMERS FOR EVALUATION MODULES

Texas Instruments Incorporated (TI) markets, sells, and loans all evaluation boards, kits, and/or modules (EVMs) pursuant to, and user expressly acknowledges, represents, and agrees, and takes sole responsibility and risk with respect to, the following:

1. User agrees and acknowledges that EVMs are intended to be handled and used for feasibility evaluation only in laboratory and/or development environments. Notwithstanding the foregoing, in certain instances, TI makes certain EVMs available to users that do not handle and use EVMs solely for feasibility evaluation only in laboratory and/or development environments, but may use EVMs in a hobbyist environment. All EVMs made available to hobbyist users are FCC certified, as applicable. Hobbyist users acknowledge, agree, and shall comply with all applicable terms, conditions, warnings, and restrictions in this document and are subject to the disclaimer and indemnity provisions included in this document.
2. Unless otherwise indicated, EVMs are not finished products and not intended for consumer use. EVMs are intended solely for use by technically qualified electronics experts who are familiar with the dangers and application risks associated with handling electrical mechanical components, systems, and subsystems.
3. User agrees that EVMs shall not be used as, or incorporated into, all or any part of a finished product.
4. User agrees and acknowledges that certain EVMs may not be designed or manufactured by TI.
5. User must read the user's guide and all other documentation accompanying EVMs, including without limitation any warning or restriction notices, prior to handling and/or using EVMs. Such notices contain important safety information related to, for example, temperatures and voltages. For additional information on TI's environmental and/or safety programs, please visit www.ti.com/esh or contact TI.
6. User assumes all responsibility, obligation, and any corresponding liability for proper and safe handling and use of EVMs.
7. Should any EVM not meet the specifications indicated in the user's guide or other documentation accompanying such EVM, the EVM may be returned to TI within 30 days from the date of delivery for a full refund. THE FOREGOING LIMITED WARRANTY IS THE EXCLUSIVE WARRANTY MADE BY TI TO USER AND IS IN LIEU OF ALL OTHER WARRANTIES, EXPRESSED, IMPLIED, OR STATUTORY, INCLUDING ANY WARRANTY OF MERCHANTABILITY OR FITNESS FOR ANY PARTICULAR PURPOSE. TI SHALL NOT BE LIABLE TO USER FOR ANY INDIRECT, SPECIAL, INCIDENTAL, OR CONSEQUENTIAL DAMAGES RELATED TO THE HANDLING OR USE OF ANY EVM.
8. No license is granted under any patent right or other intellectual property right of TI covering or relating to any machine, process, or combination in which EVMs might be or are used. TI currently deals with a variety of customers, and therefore TI's arrangement with the user is not exclusive. TI assumes no liability for applications assistance, customer product design, software performance, or infringement of patents or services with respect to the handling or use of EVMs.
9. User assumes sole responsibility to determine whether EVMs may be subject to any applicable federal, state, or local laws and regulatory requirements (including but not limited to U.S. Food and Drug Administration regulations, if applicable) related to its handling and use of EVMs and, if applicable, compliance in all respects with such laws and regulations.
10. User has sole responsibility to ensure the safety of any activities to be conducted by it and its employees, affiliates, contractors or designees, with respect to handling and using EVMs. Further, user is responsible to ensure that any interfaces (electronic and/or mechanical) between EVMs and any human body are designed with suitable isolation and means to safely limit accessible leakage currents to minimize the risk of electrical shock hazard.
11. User shall employ reasonable safeguards to ensure that user's use of EVMs will not result in any property damage, injury or death, even if EVMs should fail to perform as described or expected.
12. User shall be solely responsible for proper disposal and recycling of EVMs consistent with all applicable federal, state, and local requirements.

Certain Instructions. User shall operate EVMs within TI's recommended specifications and environmental considerations per the user's guide, accompanying documentation, and any other applicable requirements. Exceeding the specified ratings (including but not limited to input and output voltage, current, power, and environmental ranges) for EVMs may cause property damage, personal injury or death. If there are questions concerning these ratings, user should contact a TI field representative prior to connecting interface electronics including input power and intended loads. Any loads applied outside of the specified output range may result in unintended and/or inaccurate operation and/or possible permanent damage to the EVM and/or interface electronics. Please consult the applicable EVM user's guide prior to connecting any load to the EVM output. If there is uncertainty as to the load specification, please contact a TI field representative. During normal operation, some circuit components may have case temperatures greater than 60°C as long as the input and output are maintained at a normal ambient operating temperature. These components include but are not limited to linear regulators, switching transistors, pass transistors, and current sense resistors which can be identified using EVMs' schematics located in the applicable EVM user's guide. When placing measurement probes near EVMs during normal operation, please be aware that EVMs may become very warm. As with all electronic evaluation tools, only qualified personnel knowledgeable in electronic measurement and diagnostics normally found in development environments should use EVMs.

Agreement to Defend, Indemnify and Hold Harmless. User agrees to defend, indemnify, and hold TI, its directors, officers, employees, agents, representatives, affiliates, licensors and their representatives harmless from and against any and all claims, damages, losses, expenses, costs and liabilities (collectively, "Claims") arising out of, or in connection with, any handling and/or use of EVMs. User's indemnity shall apply whether Claims arise under law of tort or contract or any other legal theory, and even if EVMs fail to perform as described or expected.

Safety-Critical or Life-Critical Applications. If user intends to use EVMs in evaluations of safety critical applications (such as life support), and a failure of a TI product considered for purchase by user for use in user's product would reasonably be expected to cause severe personal injury or death such as devices which are classified as FDA Class III or similar classification, then user must specifically notify TI of such intent and enter into a separate Assurance and Indemnity Agreement.

RADIO FREQUENCY REGULATORY COMPLIANCE INFORMATION FOR EVALUATION MODULES

Texas Instruments Incorporated (TI) evaluation boards, kits, and/or modules (EVMs) and/or accompanying hardware that is marketed, sold, or loaned to users may or may not be subject to radio frequency regulations in specific countries.

General Statement for EVMs Not Including a Radio

For EVMs not including a radio and not subject to the U.S. Federal Communications Commission (FCC) or Industry Canada (IC) regulations, TI intends EVMs to be used only for engineering development, demonstration, or evaluation purposes. EVMs are not finished products typically fit for general consumer use. EVMs may nonetheless generate, use, or radiate radio frequency energy, but have not been tested for compliance with the limits of computing devices pursuant to part 15 of FCC or the ICES-003 rules. Operation of such EVMs may cause interference with radio communications, in which case the user at his own expense will be required to take whatever measures may be required to correct this interference.

General Statement for EVMs including a radio

User Power/Frequency Use Obligations: For EVMs including a radio, the radio included in such EVMs is intended for development and/or professional use only in legally allocated frequency and power limits. Any use of radio frequencies and/or power availability in such EVMs and their development application(s) must comply with local laws governing radio spectrum allocation and power limits for such EVMs. It is the user's sole responsibility to only operate this radio in legally acceptable frequency space and within legally mandated power limitations. Any exceptions to this are strictly prohibited and unauthorized by TI unless user has obtained appropriate experimental and/or development licenses from local regulatory authorities, which is the sole responsibility of the user, including its acceptable authorization.

U.S. Federal Communications Commission Compliance

For EVMs Annotated as FCC – FEDERAL COMMUNICATIONS COMMISSION Part 15 Compliant

Caution

This device complies with part 15 of the FCC Rules. Operation is subject to the following two conditions: (1) This device may not cause harmful interference, and (2) this device must accept any interference received, including interference that may cause undesired operation. Changes or modifications could void the user's authority to operate the equipment.

FCC Interference Statement for Class A EVM devices

This equipment has been tested and found to comply with the limits for a Class A digital device, pursuant to part 15 of the FCC Rules. These limits are designed to provide reasonable protection against harmful interference when the equipment is operated in a commercial environment. This equipment generates, uses, and can radiate radio frequency energy and, if not installed and used in accordance with the instruction manual, may cause harmful interference to radio communications. Operation of this equipment in a residential area is likely to cause harmful interference in which case the user will be required to correct the interference at its own expense.

FCC Interference Statement for Class B EVM devices

This equipment has been tested and found to comply with the limits for a Class B digital device, pursuant to part 15 of the FCC Rules. These limits are designed to provide reasonable protection against harmful interference in a residential installation. This equipment generates, uses and can radiate radio frequency energy and, if not installed and used in accordance with the instructions, may cause harmful interference to radio communications. However, there is no guarantee that interference will not occur in a particular installation. If this equipment does cause harmful interference to radio or television reception, which can be determined by turning the equipment off and on, the user is encouraged to try to correct the interference by one or more of the following measures:

- Reorient or relocate the receiving antenna.
- Increase the separation between the equipment and receiver.
- Connect the equipment into an outlet on a circuit different from that to which the receiver is connected.
- Consult the dealer or an experienced radio/TV technician for help.

Industry Canada Compliance (English)

For EVMs Annotated as IC – INDUSTRY CANADA Compliant:

This Class A or B digital apparatus complies with Canadian ICES-003.

Changes or modifications not expressly approved by the party responsible for compliance could void the user's authority to operate the equipment.

Concerning EVMs Including Radio Transmitters

This device complies with Industry Canada licence-exempt RSS standard(s). Operation is subject to the following two conditions: (1) this device may not cause interference, and (2) this device must accept any interference, including interference that may cause undesired operation of the device.

Concerning EVMs Including Detachable Antennas

Under Industry Canada regulations, this radio transmitter may only operate using an antenna of a type and maximum (or lesser) gain approved for the transmitter by Industry Canada. To reduce potential radio interference to other users, the antenna type and its gain should be so chosen that the equivalent isotropically radiated power (e.i.r.p.) is not more than that necessary for successful communication.

This radio transmitter has been approved by Industry Canada to operate with the antenna types listed in the user guide with the maximum permissible gain and required antenna impedance for each antenna type indicated. Antenna types not included in this list, having a gain greater than the maximum gain indicated for that type, are strictly prohibited for use with this device.

Canada Industry Canada Compliance (French)

Cet appareil numérique de la classe A ou B est conforme à la norme NMB-003 du Canada

Les changements ou les modifications pas expressément approuvés par la partie responsable de la conformité ont pu vider l'autorité de l'utilisateur pour actionner l'équipement.

Concernant les EVMs avec appareils radio

Le présent appareil est conforme aux CNR d'Industrie Canada applicables aux appareils radio exempts de licence. L'exploitation est autorisée aux deux conditions suivantes : (1) l'appareil ne doit pas produire de brouillage, et (2) l'utilisateur de l'appareil doit accepter tout brouillage radioélectrique subi, même si le brouillage est susceptible d'en compromettre le fonctionnement.

Concernant les EVMs avec antennes détachables

Conformément à la réglementation d'Industrie Canada, le présent émetteur radio peut fonctionner avec une antenne d'un type et d'un gain maximal (ou inférieur) approuvé pour l'émetteur par Industrie Canada. Dans le but de réduire les risques de brouillage radioélectrique à l'intention des autres utilisateurs, il faut choisir le type d'antenne et son gain de sorte que la puissance isotrope rayonnée équivalente (p.i.r.e.) ne dépasse pas l'intensité nécessaire à l'établissement d'une communication satisfaisante.

Le présent émetteur radio a été approuvé par Industrie Canada pour fonctionner avec les types d'antenne énumérés dans le manuel d'usage et ayant un gain admissible maximal et l'impédance requise pour chaque type d'antenne. Les types d'antenne non inclus dans cette liste, ou dont le gain est supérieur au gain maximal indiqué, sont strictement interdits pour l'exploitation de l'émetteur.

Mailing Address: Texas Instruments, Post Office Box 655303, Dallas, Texas 75265
Copyright © 2014, Texas Instruments Incorporated

Important Notice for Users of EVMs Considered "Radio Frequency Products" in Japan

EVMs entering Japan are NOT certified by TI as conforming to Technical Regulations of Radio Law of Japan.

If user uses EVMs in Japan, user is required by Radio Law of Japan to follow the instructions below with respect to EVMs:

1. Use EVMs in a shielded room or any other test facility as defined in the notification #173 issued by Ministry of Internal Affairs and Communications on March 28, 2006, based on Sub-section 1.1 of Article 6 of the Ministry's Rule for Enforcement of Radio Law of Japan,
2. Use EVMs only after user obtains the license of Test Radio Station as provided in Radio Law of Japan with respect to EVMs, or
3. Use of EVMs only after user obtains the Technical Regulations Conformity Certification as provided in Radio Law of Japan with respect to EVMs. Also, do not transfer EVMs, unless user gives the same notice above to the transferee. Please note that if user does not follow the instructions above, user will be subject to penalties of Radio Law of Japan.

http://www.tij.co.jp

【無線電波を送信する製品の開発キットをお使いになる際の注意事項】 本開発キットは技術基準適合証明を受けておりません。 本製品のご使用に際しては、電波法遵守のため、以下のいずれかの措置を取っていただく必要がありますのでご注意ください。

1. 電波法施行規則第6条第1項第1号に基づく平成18年3月28日総務省告示第173号で定められた電波暗室等の試験設備でご使用いただく。
2. 実験局の免許を取得後ご使用いただく。
3. 技術基準適合証明を取得後ご使用いただく。。

なお、本製品は、上記の「ご使用にあたっての注意」を譲渡先、移転先に通知しない限り、譲渡、移転できないものとします

上記を遵守頂けない場合は、電波法の罰則が適用される可能性があることをご留意ください。

日本テキサス・インスツルメンツ株式会社
東京都新宿区西新宿６丁目２４番１号
西新宿三井ビル
http://www.tij.co.jp

Texas Instruments Japan Limited
(address) 24-1, Nishi-Shinjuku 6 chome, Shinjuku-ku, Tokyo, Japan

IMPORTANT NOTICE

Texas Instruments Incorporated and its subsidiaries (TI) reserve the right to make corrections, enhancements, improvements and other changes to its semiconductor products and services per JESD46, latest issue, and to discontinue any product or service per JESD48, latest issue. Buyers should obtain the latest relevant information before placing orders and should verify that such information is current and complete. All semiconductor products (also referred to herein as “components”) are sold subject to TI’s terms and conditions of sale supplied at the time of order acknowledgment.

TI warrants performance of its components to the specifications applicable at the time of sale, in accordance with the warranty in TI’s terms and conditions of sale of semiconductor products. Testing and other quality control techniques are used to the extent TI deems necessary to support this warranty. Except where mandated by applicable law, testing of all parameters of each component is not necessarily performed.

TI assumes no liability for applications assistance or the design of Buyers’ products. Buyers are responsible for their products and applications using TI components. To minimize the risks associated with Buyers’ products and applications, Buyers should provide adequate design and operating safeguards.

TI does not warrant or represent that any license, either express or implied, is granted under any patent right, copyright, mask work right, or other intellectual property right relating to any combination, machine, or process in which TI components or services are used. Information published by TI regarding third-party products or services does not constitute a license to use such products or services or a warranty or endorsement thereof. Use of such information may require a license from a third party under the patents or other intellectual property of the third party, or a license from TI under the patents or other intellectual property of TI.

Reproduction of significant portions of TI information in TI data books or data sheets is permissible only if reproduction is without alteration and is accompanied by all associated warranties, conditions, limitations, and notices. TI is not responsible or liable for such altered documentation. Information of third parties may be subject to additional restrictions.

Resale of TI components or services with statements different from or beyond the parameters stated by TI for that component or service voids all express and any implied warranties for the associated TI component or service and is an unfair and deceptive business practice. TI is not responsible or liable for any such statements.

Buyer acknowledges and agrees that it is solely responsible for compliance with all legal, regulatory and safety-related requirements concerning its products, and any use of TI components in its applications, notwithstanding any applications-related information or support that may be provided by TI. Buyer represents and agrees that it has all the necessary expertise to create and implement safeguards which anticipate dangerous consequences of failures, monitor failures and their consequences, lessen the likelihood of failures that might cause harm and take appropriate remedial actions. Buyer will fully indemnify TI and its representatives against any damages arising out of the use of any TI components in safety-critical applications.

In some cases, TI components may be promoted specifically to facilitate safety-related applications. With such components, TI’s goal is to help enable customers to design and create their own end-product solutions that meet applicable functional safety standards and requirements. Nonetheless, such components are subject to these terms.

No TI components are authorized for use in FDA Class III (or similar life-critical medical equipment) unless authorized officers of the parties have executed a special agreement specifically governing such use.

Only those TI components which TI has specifically designated as military grade or “enhanced plastic” are designed and intended for use in military/aerospace applications or environments. Buyer acknowledges and agrees that any military or aerospace use of TI components which have ***not*** been so designated is solely at the Buyer's risk, and that Buyer is solely responsible for compliance with all legal and regulatory requirements in connection with such use.

TI has specifically designated certain components as meeting ISO/TS16949 requirements, mainly for automotive use. In any case of use of non-designated products, TI will not be responsible for any failure to meet ISO/TS16949.

Products		**Applications**	
Audio	www.ti.com/audio	Automotive and Transportation	www.ti.com/automotive
Amplifiers	amplifier.ti.com	Communications and Telecom	www.ti.com/communications
Data Converters	dataconverter.ti.com	Computers and Peripherals	www.ti.com/computers
DLP® Products	www.dlp.com	Consumer Electronics	www.ti.com/consumer-apps
DSP	dsp.ti.com	Energy and Lighting	www.ti.com/energy
Clocks and Timers	www.ti.com/clocks	Industrial	www.ti.com/industrial
Interface	interface.ti.com	Medical	www.ti.com/medical
Logic	logic.ti.com	Security	www.ti.com/security
Power Mgmt	power.ti.com	Space, Avionics and Defense	www.ti.com/space-avionics-defense
Microcontrollers	microcontroller.ti.com	Video and Imaging	www.ti.com/video
RFID	www.ti-rfid.com		
OMAP Applications Processors	www.ti.com/omap	**TI E2E Community**	e2e.ti.com
Wireless Connectivity	www.ti.com/wirelessconnectivity		

Mailing Address: Texas Instruments, Post Office Box 655303, Dallas, Texas 75265
Copyright © 2014, Texas Instruments Incorporated